SKUNA

SKUNA – BOLLARD SLIM BASE CVDA

BOLLARDS

LAST UPDATE: 22-02-2024

A new compact bollard and wall luminaire family featuring robust aluminium housing with various type of light distribution. SKUNA utilized LED modules from renowned manufacturer with high precision optical lenses which offer narrow beam, medium beam, wide beam, forward throw and side throw light distribution. Featuring screw-less design housing made from copper free LM6 die-cast aluminium and S6063 extruded aluminium with Nano-Ceramic protection film for superior corrosion resistance. SKUNA is perfect for residential area as well as community-scale blocks.

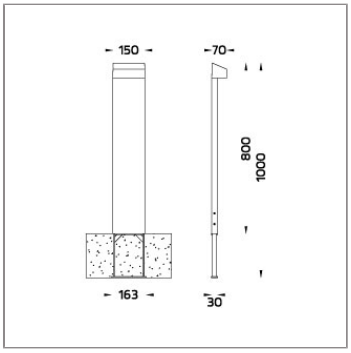

Technical Data

IP66

Ordering Code :	7848-K-7-577-XX
Lamp :	LED
Beam :	Forward throw
CCT :	2700 K
CRI :	CRI >80
SDCM :	SDCM = 3
Lamp Lumen :	1340 lm
Luminaire Lumen :	670 lm
Lamp Wattage :	13 W(24Vdc)
Luminaire Wattage :	15 W
Efficacy :	44 lm/W
Ambient Temperature :	40°C
Lumen Maintenance	L70B10 >66,000 h
Controller :	On-Off / DALI
Input Voltage :	24Vdc
Net Weight :	- kg.

Ordering code guide

B D

XXXX-X-X-XXX-XX

A C E

A Product Code
B Reflector
C Electrical Component
D Lamp
E Color

Icon definition

Unilamp Co., Ltd.
461 Ramintra Road, Kannayao, Bangkok 10230 Thailand
Tel : +66(0)2 943 2420-1, +66(0)2 946 4170-1
Fax : +66(0)2 943 2419
online@unilamp.co.th
www.unilamp.co.th

*Due to the constancy of product development, we reserve the right to alter all specification without prior notice.

SKUNA

SKUNA – BOLLARD SLIM BASE CVDA

BOLLARDS

LAST UPDATE: 22-02-2024

Specification

IEC Standard	IEC 60598-1 General Requirement
	IEC 60598-2-1 Fixed Luminaires
Protection	IP66 Class I
IK Rating	Protection against mechanical impact IK10 on body and IK08 on optical part.
Luminaires Body Housing	High-pressure Die Cast Aluminium alloy body and components.
	Extruded Aluminium S6063 alloy body with low copper content.
	Hot-Dipped Galvanized Anchor Bolt Kit.
Coating Process	Nano Ceramic surface conversion, resistant to corrosive environment. Luminiare primarily coated with epoxy resin and top coated with UV stabilized polyester powder and cured in digital temperature controlled chamber at 200°C.
Diffuser	Impact resistant safety tempered glass cover. Able to withstand the temperature up to 250°C.
Lens	Molded PC lens from renowned manufacturers in various light distribution patterns.
Gasket	Post-cured treated silicone gasket. Temperature and weather resistant. Working temperature -40°C to +200°C.
External Screws	External screws are in stainless steel with protection grease.
Cable Entry	Cable entry protected by M14 cable gland. To be used with H05RN-F/ H07RN-F cable with 5-8mm. diameter.
Led	High efficiency LED module utilized chips from world renowned manufacturer. Assembled on MCPCB and mounted on to heat conductive material.
Driver	Driver is not included and has to be ordered separately.
Internal Wire	Tinned copper conductor with silicone insulated internal wire. IMQ approved. Working temperature -40°C to +180°C.
Terminal Block	Terminal block in GFR PA6.6 for cable with cross section up to 2.5 sqmm. VDE approved.
	Class1 luminaire provided with the earth connection.
Pre-Wire Cable	Pre-wired with 5-core cable for power (3x1 sqmm.) and dimming signal (2x1 sqmm.).
	Equipped with anti-humidity kit.
Caution	Installation work has to be carried on according to the enclosed installation manual.
Color	Black 01 Graphite 02 Dark Grey 03 Aluminium Silver 04 White 06 Wooden Brown 07

Light Distribution

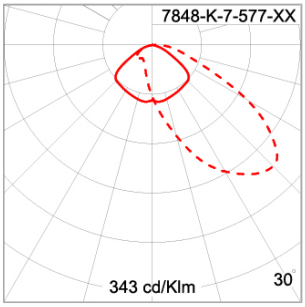

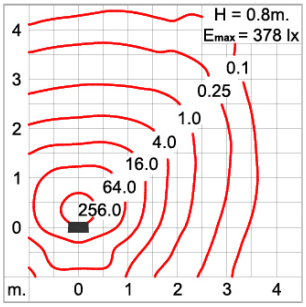

Unilamp Co., Ltd.
461 Ramintra Road, Kannayao, Bangkok 10230 Thailand
Tel : +66(0)2 943 2420-1, +66(0)2 946 4170-1
Fax : +66(0)2 943 2419
online@unilamp.co.th
www.unilamp.co.th

*Due to the constancy of product development, we reserve the right to alter all specification without prior notice.

SKUNA

SKUNA – BOLLARD SLIM BASE CVDA

BOLLARDS

LAST UPDATE: 22-02-2024

Bug Report

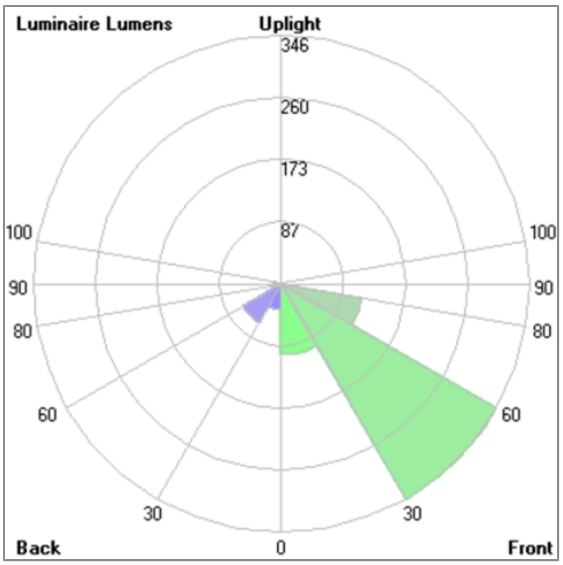

Lum. Classification System (LCS)

LCS	Zone	%Lumens	%Lamp	%Lum
FL	(0-30)	98.8	7.4	14.7
FM	(30-60)	346.2	25.8	51.7
FH	(60-80)	113.5	8.5	16.9
FVH	(80-90)	2.5	0.2	0.4
BL	(0-30)	35.7	2.7	5.3
BM	(30-60)	60.8	4.5	9.1
BH	(60-80)	12.0	0.9	1.8
BVH	(80-90)	0.6	0.0	0.1
UL	(90-100)	< 0.05	0.0	0.0
UH	(100-180)	0.1	0.0	0.0
Total		670.2	50.0	100.0
BUG Rating		**B0-U1-G0**		

*Due to the constancy of product development,
we reserve the right to alter all specification
without prior notice.

Unilamp Co., Ltd.
461 Ramintra Road, Kannayao, Bangkok 10230 Thailand
Tel : +66(0)2 943 2420-1, +66(0)2 946 4170-1
Fax : +66(0)2 943 2419
online@unilamp.co.th
www.unilamp.co.th

SKUNA

SKUNA – BOLLARD SLIM BASE CVDA

BOLLARDS

LAST UPDATE: 22-02-2024

Accessories

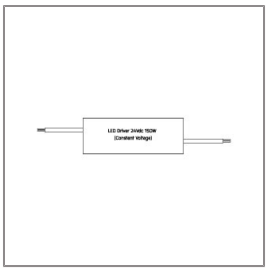

Ordering Code:
AUN-DRG-0011-00
LED Constant Voltage
Driver 24Vdc 150W.

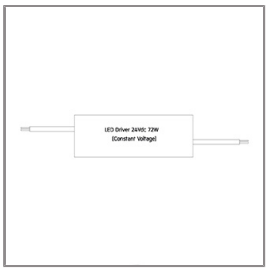

Ordering Code:
AUN-DRG-0027-00
LED Constant Voltage
Driver 24Vdc 72W.

*Due to the constancy of product development,
we reserve the right to alter all specification
without prior notice.

Unilamp Co., Ltd.
461 Ramintra Road, Kannayao, Bangkok 10230 Thailand
Tel : +66(0)2 943 2420-1, +66(0)2 946 4170-1
Fax : +66(0)2 943 2419
online@unilamp.co.th
www.unilamp.co.th