NEOS

NEOS – FLOOD LIGHT WITHOUT BASE

SURFACE WASHER & FLOOD LIGHT

LAST UPDATE: 23-11-2023

NEOS is a small sized high performing area light. Outstanding optical efficacy, high ambient temperature rating and a wide range of mounting accessory makes NEOS a highly competitive product. The smooth curved design eliminates accumulation of water and dust. The unobtrusive slim design is a great match for commercial and residential lighting tasks. The area light can be either equipped with a photocell, DALI-2 control or basic on-off control gear. NEOS can be equipped with mounting accessories for pole integrated mounting, pole bracket, wall and wall corner. The pole bracket is suitable for Pole diameters up to 105mm.

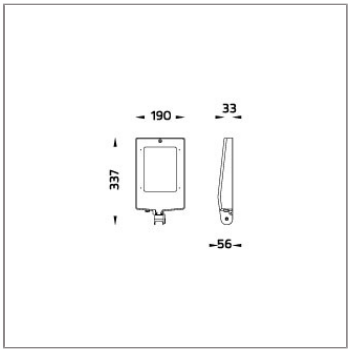

Technical Data

Ordering Code :	2356-E-5-668-XX
Lamp :	LED
Beam :	90°
CCT :	3000 K
CRI :	CRI >80
SDCM :	SDCM = 3
Lamp Lumen :	4220 lm
Luminaire Lumen :	3570 lm
Lamp Wattage :	23 W
Luminaire Wattage :	25 W
Efficacy :	142 lm/W
Ambient Temperature :	50°C
Lumen Maintenance	L70B10 >72,000 h
Controller :	DALI
Input Voltage :	220-240Vac 50/60Hz
Net Weight :	2.80 kg.

Ordering code guide

B D

XXXX-X-X-XXX-XX

A C E

A Product Code
B Reflector
C Electrical Component
D Lamp
E Color

Icon definition

Unilamp Co., Ltd.
461 Ramintra Road, Kannayao, Bangkok 10230 Thailand
Tel : +66(0)2 943 2420-1, +66(0)2 946 4170-1
Fax : +66(0)2 943 2419
online@unilamp.co.th
www.unilamp.co.th

*Due to the constancy of product development, we reserve the right to alter all specification without prior notice.

NEOS

NEOS – FLOOD LIGHT WITHOUT BASE

SURFACE WASHER & FLOOD LIGHT

LAST UPDATE: 23-11-2023

Specification

IEC Standard	IEC 60598-1 General Requirement
	IEC 60598-2-1 Fixed Luminaires
Protection	IP66 Class I
IK Rating	Protection against mechanical impact IK08 on body and optical part.
Luminaires Body Housing	High-pressure Die Cast Aluminium alloy body and components.
Coating Process	Nano Ceramic surface conversion, resistant to corrosive environment. Luminiare primarily coated with epoxy resin and top coated with UV stabilized polyester powder and cured in digital temperature controlled chamber at 200°C.
Diffuser	Impact resistant safety tempered glass cover. Able to withstand the temperature up to 250°C.
Lens	Molded PC lens from renowned manufacturers in various light distribution patterns.
Adjustable Optic	Adjustable aiming unit through graduated scale.
Gasket	Post-cured treated silicone gasket. Temperature and weather resistant. Working temperature -40°C to +200°C.
External Screws	External screws are in stainless steel with protection grease.
Cable Entry	Cable entry protected by weather proof grommet. To be used with H05RN-F/ H07RN-F cable with 6-13mm. diameter.
Led	High efficiency LED module utilized chips from world renowned manufacturer. Assembled on MCPCB and mounted on to heat conductive material.
Driver	High quality DALI Driver in constant current. Conform to applicable safety standards and electromagnetic compatibility.
Enhanced Protection	The luminaire is equipped with a 10kV surge protection device, the function of the protector is indicated by a LED, performance in compliance with IEC61643-11.
Internal Wire	Tinned copper conductor with silicone insulated internal wire. IMQ approved. Working temperature -40°C to +180°C.
Terminal Block	Terminal block in GFR PA6.6 for cable with cross section up to 2.5 sqmm. VDE approved.
	Class1 luminaire provided with the earth connection.
Pre-Wire Cable	Pre-wired with 5-core cable for power (3x1 sqmm.) and dimming signal (2x1 sqmm.).
Caution	Installation work has to be carried on according to the enclosed installation manual.
Color	Black 01 Graphite 02 Dark Grey 03 Aluminium Silver 04 White 06 Wooden Brown 07

Light Distribution

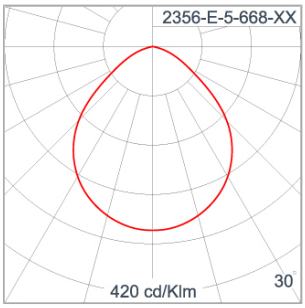

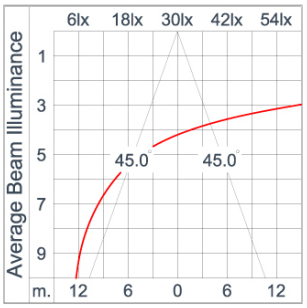

Unilamp Co., Ltd.
461 Ramintra Road, Kannayao, Bangkok 10230 Thailand
Tel : +66(0)2 943 2420-1, +66(0)2 946 4170-1
Fax : +66(0)2 943 2419
online@unilamp.co.th
www.unilamp.co.th

*Due to the constancy of product development, we reserve the right to alter all specification without prior notice.

NEOS

NEOS – FLOOD LIGHT WITHOUT BASE

SURFACE WASHER & FLOOD LIGHT

LAST UPDATE: 23-11-2023

Unilamp

Accessories

Ordering Code:
AUN-CON-0011-00
IP68 Water Tight Connecting Device 5 Pole, Cable Diameter 7.1 – 13mm. (1-10V or Dali)

Ordering Code:
AUN-CON-0012-00
IP68 Water Tight Connecting Device with Distribution block, 5 pole, 1 input, 2 outputs, Cable Diameter 7.1 – 13mm. (1-10V or Dali)

Ordering Code:
AUN-CON-0014-00
IP68 Water Tight Connecting Device 5 Pole, Cable Diameter 8 – 12.5mm. (1-10V or DALI)

Ordering Code:
AUN-SEN-0001-00
Photo Cell per unit. (Pre-assembly from factory).

Ordering Code:
AUN-MOT-0008-XX
Pole mount adaptor for square pole.

Ordering Code:
AUN-MOT-0009-XX
Pole mount adaptor for pole dia 60mm.

Ordering Code:
AUN-MOT-0010-XX
Pole mount adaptor for pole dia 76mm.

Ordering Code:
AUN-MOT-0011-XX
Pole mount adaptor for pole dia 102-105mm.

Ordering Code:
AUN-RCH-0012-XX
Ground mount base or Wall mount base.

Ordering Code:
AUN-MOT-0020-XX
Turnable round base for Ground mount or Wall mount.

Ordering Code:
AUN-MOT-0012-XX
Wall Spacer.

Ordering Code:
AUN-BRK-0002-XX
Corner Bracket.

Unilamp Co., Ltd.
461 Ramintra Road, Kannayao, Bangkok 10230 Thailand
Tel : +66(0)2 943 2420-1, +66(0)2 946 4170-1
Fax : +66(0)2 943 2419
online@unilamp.co.th
www.unilamp.co.th

*Due to the constancy of product development, we reserve the right to alter all specification without prior notice.

NEOS

NEOS – FLOOD LIGHT WITHOUT BASE

SURFACE WASHER & FLOOD LIGHT

LAST UPDATE: 23-11-2023

Ordering Code:
AUN-GHS-0032-XX
Glare Shield Cap.
(Pre-assembly from factory)

*Due to the constancy of product development, we reserve the right to alter all specification without prior notice.

Unilamp Co., Ltd.
461 Ramintra Road, Kannayao, Bangkok 10230 Thailand
Tel : +66(0)2 943 2420-1, +66(0)2 946 4170-1
Fax : +66(0)2 943 2419
online@unilamp.co.th
www.unilamp.co.th